# Audit Report

MODIFICATIONS TO THE TUBE-LAUNCHED, OPTICALLY TRACKED, WIRE-COMMAND MISSILE LAUNCHER FOR THE BRADLEY FIGHTING VEHICLE SYSTEM

Report Number 98-165 June 25, 1998

Office of the Inspector General
Department of Defense

**Additional Copies**

To obtain additional copies of this audit report, contact the Secondary Reports Distribution Unit of the Analysis, Planning, and Technical Support Directorate at (703) 604-8937 (DSN 664-8937) or FAX (703) 604-8932 or visit the Inspector General, DoD, Home Page at: WWW.DODIG.OSD.MIL.

**Suggestions for Future Audits**

To suggest ideas for or to request future audits, contact the Planning and Coordination Branch of the Analysis, Planning, and Technical Support Directorate at (703) 604-8908 (DSN 664-8908) or FAX (703) 604-8932. Ideas and requests can also be mailed to:

OAIG-AUD (ATTN: APTS Audit Suggestions)
Inspector General, Department of Defense
400 Army Navy Drive (Room 801)
Arlington, Virginia 22202-2884

**Defense Hotline**

To report fraud, waste, or abuse, contact the Defense Hotline by calling (800) 424-9098; by sending an electronic message to Hotline@DODIG.OSD.MIL; or by writing the Defense Hotline, The Pentagon, Washington, D.C. 20301-1900. The identity of each writer and caller is fully protected.

**Acronyms**

| | |
|---|---|
| ACU | Armament Control Unit |
| DMWR | Depot Maintenance Work Requirement |
| MWO | Modification Work Order |
| TOW | Tube-Launched, Optically Tracked, Wire-Command |

INSPECTOR GENERAL
DEPARTMENT OF DEFENSE
400 ARMY NAVY DRIVE
ARLINGTON, VIRGINIA 22202

June 25, 1998

MEMORANDUM FOR DEPUTY UNDER SECRETARY OF DEFENSE
(LOGISTICS)
AUDITOR GENERAL, DEPARTMENT OF THE ARMY

SUBJECT: Audit Report on Modifications to the Tube-Launched, Optically Tracked, Wire-Command Missile Launcher for the Bradley Fighting Vehicle System (Report No. 98-165)

We are providing this report for information and use. This report is the first in a series of reports on the consolidation of tactical missile maintenance work loads at Letterkenny Army Depot in response to a request from the Deputy Under Secretary of Defense (Logistics). We considered management comments on a draft of this report in preparing the final report.

Based on management comments, Recommendation 5. was revised. Comments on a draft of this report conformed to the requirements of DoD Directive 7650.3 and left no unresolved issues. Therefore, no additional comments are required.

We appreciate the courtesies extended to the audit staff. Questions on the audit should be directed to Mr. John A. Gannon at (703) 604-9176 (DSN 664-9176) email jgannon@dodig.osd.mil or Mr. Stephen T. Hampton at (703) 604-9194 (DSN 664-9194) email shampton@dodig.osd.mil. See Appendix E for the report distribution. The audit team members are listed inside the back cover.

David K. Steensma

David K. Steensma
Deputy Assistant Inspector General
for Auditing

Office of the Inspector General, DoD

Report No. 98-165 June 25, 1998
(Project No. 7LB-5031.02)

# Modifications to the Tube-Launched, Optically Tracked, Wire-Command Missile Launcher for the Bradley Fighting Vehicle System

## Executive Summary

**Introduction.** This report is the first in a series of reports on the consolidation of tactical missile maintenance work loads at Letterkenny Army Depot. This audit was performed in response to a request by the Deputy Under Secretary of Defense (Logistics). As part of the audit, we reviewed the work loads associated with depot-level maintenance and repairs and depot-level modifications performed for the Tube-Launched, Optically Tracked, Wire-Command (TOW) missile launcher for the Bradley Fighting Vehicle System (TOW missile launcher). Our preliminary review of the TOW missile launcher modification requirements identified potential problems concerning field execution of a modification required to be completed by September 1999.

**Audit Objectives.** Our overall audit objective was to evaluate the cost and benefits associated with the consolidation of tactical missile guidance and control maintenance work loads at Letterkenny Army Depot and to evaluate the management control program as it relates to the audit objective. Our specific audit objective was to determine whether field modification teams were modifying and testing the TOW missile launcher as prescribed by the Department of the Army modification work order 9-1425-453-50.

The overall audit objective will be discussed in a future report. We did not review the management control program because the General Accounting Office has identified material management control weaknesses within the Army's management of the Modification Work Order Program and corrective actions have been initiated.

**Audit Results.** More than 800 TOW missile launcher armament control units have been modified in the field with no assurance that the system design specifications have been met. As a result, interchangeability and overall reliability of the armament control units may have been degraded. Also, if the approximately 1,200 additional units are modified in the field by September 1999, as scheduled, without enforcing quality assurance requirements, more than 2,000 ACUs, valued at more than $12 million, may not reliably operate in accordance with design specifications. See Part I for a discussion of the audit results.

**Summary of Recommendations.** We recommend that the Army Acquisition Executive, in coordination with the Army Deputy Chief of Staff (Logistics), initiate a thorough technical evaluation of the design specifications for the armament control unit umbilical and motor stop switches to determine the full effect of not meeting the specifications, evaluate the adequacy of test equipment and procedures updating them as necessary, determine the necessity of performing corrective actions to previously

modified TOW missile launchers, and direct that all work loads for future field modifications comply with updated modification quality assurance requirements.

**Management Comments.** The Army agreed to initiate a technical evaluation of the design specifications for the armament control unit to determine the full effect of not meeting the design specification and stated that a technical evaluation is scheduled for completion June 30, 1998. The Army also agreed to evaluate the adequacy of test equipment and procedures in view of the results of the technical evaluation and to update the depot maintenance work requirement 9-1440-453-1 and modification work order 9-1425-453-50 after the technical evaluation was completed. The Army further concurred with determining the necessity of performing corrective actions to previously modified TOW missile launchers and stated that results from testing a sample of modified armament control units would provide the basis for a decision on what corrective action may be required.

The Army nonconcurred with the draft recommendation that all future field modifications be performed by Letterkenny Army Depot to ensure compliance with modification work order and depot maintenance work requirement quality assurance requirements. The Army stated that the updated modification work order will address quality assurance procedures and verification in accordance with Army policy. The Army further stated that it is Army policy to perform modifications in the private sector using best value as the criteria. As an alternative, the Army intends to award the FY 1999 armament control unit modification program using best value criteria to either Raytheon Systems Company or Letterkenny Army Depot. See Part I for a summary of management comments and Part III for the complete text of management comments.

**Audit Response.** Comments from the Army were responsive. The proposed action to perform future modification work loads in accordance with updated modification work order and depot maintenance work requirement quality assurance requirements satisfies the intent of the recommendation. We agree with the Army intention to award future work loads using a best value approach and revised the recommendation to omit the requirement to direct all future work loads to Letterkenny Army Depot. No additional comments are required.

# Table of Contents

**Executive Summary** i

**Part I - Audit Results**

Introduction 2
Audit Background 2
Audit Objectives 4
Field Modifications to the TOW Missile Launcher Armament Control Unit 5

**Part II - Additional Information**

Appendix A. Audit Process
Scope and Methodology 16
Management Control Program Review 16
Appendix B. Summary of Prior Coverage 17
Appendix C. Memorandum for Deputy Under Secretary of Defense (Logistics) 19
Appendix D. Field Modification Test Data 21
Appendix E. Report Distribution 23

**Part III - Management Comments**

Department of the Army Comments 26

# Part I - Audit Results

# Introduction

This report is the first in a series of reports on the consolidation of tactical missile maintenance work loads at Letterkenny Army Depot (Letterkenny). This audit was performed in response to a request by the Deputy Under Secretary of Defense (Logistics). As part of the audit, we reviewed the work loads associated with depot-level modifications performed for the Tube-Launched, Optically Tracked, Wire-Command (TOW) missile launcher for the Bradley Fighting Vehicle System (TOW missile launcher).

Our preliminary review of the TOW missile launcher modification requirements identified potential problems concerning field execution of a modification required to be completed by September 1999. On December 23, 1997, we issued a memorandum to the Deputy Under Secretary of Defense (Logistics) detailing our concern (see Appendix C). The memorandum was intended to provide management an opportunity to evaluate the modification procedures and the adequacy of quality assurance testing performed during field modifications and to correct any existing deficiencies before executing future modifications. This report discusses our concerns with the field modifications.

# Audit Background

**The TOW Missile Launcher.** The TOW missile launcher (see Figure 1)

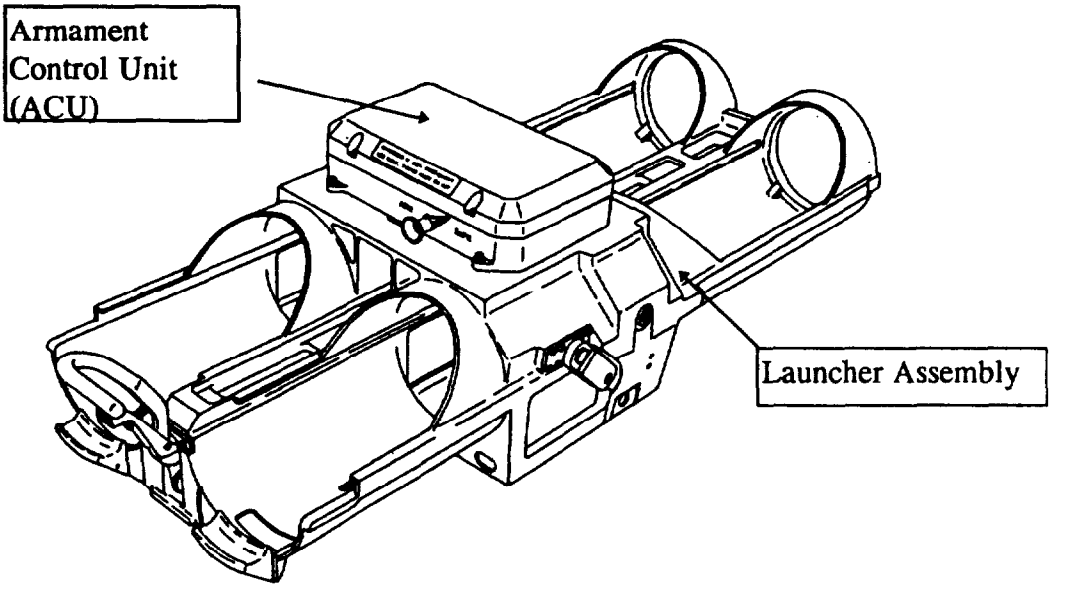


Figure 1. TOW Missile Launcher

is a device mounted on a Bradley Fighting Vehicle System that holds and launches TOW missiles. The TOW missile is the U.S. Army and U.S. Marine

Corps primary anti-tank and anti-armor weapon system. The TOW missile launcher primarily consists of a launcher structure and an armament control unit (ACU). The ACU provides the electrical interface between the missile and the launcher assembly, which includes routing prefire, fire, guidance, missile identification, and wire cut signals to and from the selected missile, and arms the missile. The TOW missile launcher is undergoing several modifications including a modification to the ACU.

**ACU Modification.** The ACU modification is a conversion of the TOW missile launcher to the latest configuration. The modification involves updating the ACU and replacing the missile stop. Available records indicate that 2,052 field modifications were to be performed and, as of January 1998, 844 had been completed.* The remaining 1,208 are scheduled to be completed by September 1999. The program executive office, specifically the Close Combat Anti-Armor Weapon Systems Program Executive Office, Redstone Arsenal, Alabama (the program office), is responsible for the management and execution of the ACU modification. The procedures for the ACU modification are defined in the Department of the Army modification work order (MWO) 9-1425-453-50.

In September 1994, a depot maintenance team from Red River Army Depot, the depot source of repair at the time, performed the initial field application of the MWO in Korea for the U.S. Army 2nd Infantry Division. Over 50 percent of the units modified failed when tested with live missiles. A team of contractor and Government personnel was dispatched to Korea to investigate the problems encountered. The consensus of the team was that the problems experienced were caused, in part, by the misalignment of the umbilical and motor stop switches in the ACU, specifically switches S1 through S6. Additional information on the problems experienced in Korea is in Appendix B.

The Government contracted with Raytheon Systems Company (formerly Hughes Aircraft Company) to develop a special gauge set and associated procedures to be used for aligning and testing the umbilical and motor stop switches. The cost to develop and deliver two gauge sets was $41,100. The depot maintenance work requirement (DMWR) was updated to require use of the new gauge set and procedures developed to ensure proper alignment of these switches. In April 1996, the new test equipment and authorization for provisional use of the updated DMWR were delivered to Letterkenny.

The ACU modification is being performed both at Letterkenny and in the field. ACU field modifications are performed by field service representatives from Raytheon Systems Company. Raytheon Systems Company applies multiple modifications at each field location. Consequently, labor hours and associated travel costs are not tied to individual modifications. The program office estimated total expenditures at $1.2 million, as of April 8, 1998, for all field modifications performed. Because the ACU modification is tied to reimbursement for other modifications, the program office was unable to report to us how much was spent specifically on ACU modifications.

* The exact number of ACUs modified and scheduled for future modification is unclear because of the incompleteness of contractor and Government records.

## Audit Objectives

Our overall audit objective was to evaluate the cost and benefits associated with the consolidation of tactical missile guidance and control maintenance work loads at Letterkenny Army Depot and to evaluate the management control program as it relates to the audit objective. Our specific audit objective was to determine whether field modification teams were modifying and testing the TOW missile launcher as prescribed by the Department of the Army MWO 9-1425-453-50.

The overall audit objective will be discussed in a future report. We did not review the management control program as it relates to the specific audit objective because the General Accounting Office has identified material management control weaknesses within the Army's management of the Modification Work Order Program and corrective actions have been initiated. See Appendix A for a discussion of the scope and methodology and Appendix B for a summary of prior coverage related to the audit objective.

# Field Modifications to the TOW Missile Launcher ACU

More than 800 TOW missile launcher ACUs have been modified in the field with no assurance that the system design specifications have been met. This occurred because the program office did not enforce the quality assurance requirements prescribed by the Department of the Army MWO 9-1425-453-50 and DMWR 9-1440-453-1. As a result, interchangeability and overall reliability of the armament control units could have been degraded. Also, if the approximately 1,200 additional units are modified in the field by September 1999, as scheduled, without enforcing quality assurance requirements, more than 2,000 ACUs, valued at more than $12 million, may not reliably operate in accordance with design specifications.

## Criteria

**Policy on Quality Assurance.** The Federal Acquisition Regulation, part 46, "Quality Assurance," October 21, 1997, paragraph 46.102 directs that agencies ensure that services or supplies tendered by contractors meet contract requirements. It further requires that Government contract quality assurance is conducted before acceptance by or under the direction of Government personnel.

**MWO 9-1425-453-50.** The MWO issued November 1, 1993, establishes the instructions and requirements for applying the modification to the ACU. It requires that a depot maintenance team perform the modification and specifies the special tools, jigs, test measurement, diagnostic equipment, and fixtures required to perform the modification. It also requires that quality assurance testing be performed as prescribed by DMWR 9-1440-453-1, January 14, 1997.

**DMWR 9-1440-453-1.** The DMWR contains the instructions for performing depot maintenance on the TOW missile launcher, to include technical support requirements, pre-shop analysis, overhaul procedures, and quality assurance requirements. The DMWR further stipulates that when work can be accomplished only in a manner other than specified, prior approval must be obtained by submitting a request for deviation or waiver to the program office. The DMWR instructions are for use by contractor or depot personnel, and take precedence in the case of conflict with any other documents pertinent to depot maintenance.

**Conflicting Guidance.** A conflict exists between the MWO and the DMWR. The MWO was never updated to reflect changes in equipment and procedures resulting from the problems experienced in Korea during 1994. Although this

conflict exists, the DMWR clearly states that its procedures take precedence in the event of any conflict pertinent to depot maintenance. Therefore, the test equipment required and the modification procedures in the DMWR superseded the MWO. For this reason, we did not make a recommendation to update the modification procedures in the MWO.

## ACU Field Modifications

More than 800 TOW missile launcher ACUs have been modified in the field with no assurance that the system design specifications were met. The field modification includes both ACU and launcher final assembly and testing.

**ACU Final Assembly and Testing.** Final assembly and testing of the ACU requires a switch adjustment gauge set, part 1366078, to ensure proper alignment of the ACU. The gauge set comprises gauge assemblies, tools, and fixtures as shown in Figure 2.

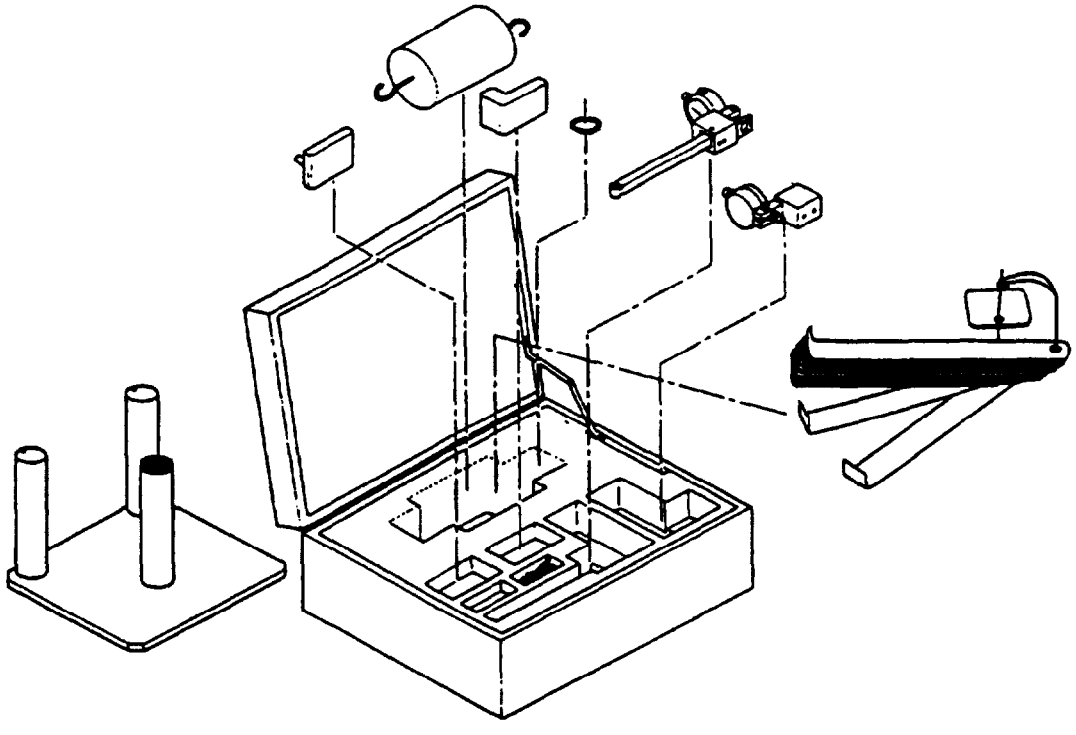

Figure 2. Switch Adjustment Gauge Set

The gauge set is used to align and test umbilical and motor stop switches within the ACU. Those switches must be set to precise tolerances to satisfy design specifications and meet minimum in-process quality assurance inspection points required by the DMWR.

**Alignment of Umbilical Switches.** The DMWR requires the gauge set to align and test the ACU umbilical switches S1, S2, S3, and S4. Switches S1 and S2 are associated with the inboard launcher tube, while S3 and S4 are associated with the outboard launcher tube. The S2 and S4 switches, when activated, signal that a missile is present. The S1 and S3 switches, when activated, signal that a missile has been selected. According to the design specifications, those umbilical switches should be aligned to activate when the bottom of the holdback pin plunger is 0.965 inches, plus or minus 0.020 inches, from the bottom of the ACU housing as shown in Figure 3.

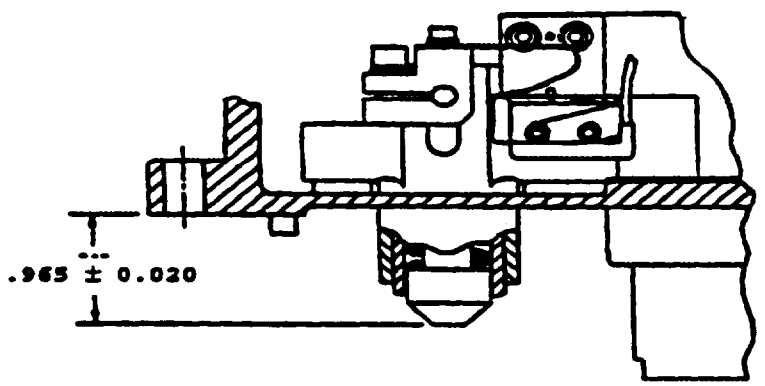


Figure 3. Umbilical Switch Specification

The S1 through S4 gauge assembly of the gauge set is used to measure the depth of the holdback pin plunger at the time the umbilical switches have been activated.

**Alignment of Motor Stop Switches.** The DMWR requires the gauge set to align and test motor stop switches S5 and S6. The S5 switch is the electrical limit switch for the extend function of the ACU motor. The S6 switch is the electrical limit switch for the retract function of the ACU motor. The S5 and S6 settings affect the distance that the holdback pin plunger and umbilical cable are extended when arming the system and retracted when disarming the system. The gauge set, specifically the S5 gauge assembly is required to ensure that the holdback pin plunger depth in relation to the ACU housing is between 1.058 inches and 1.134 inches, as shown in Figure 4, in order to satisfy design specifications.

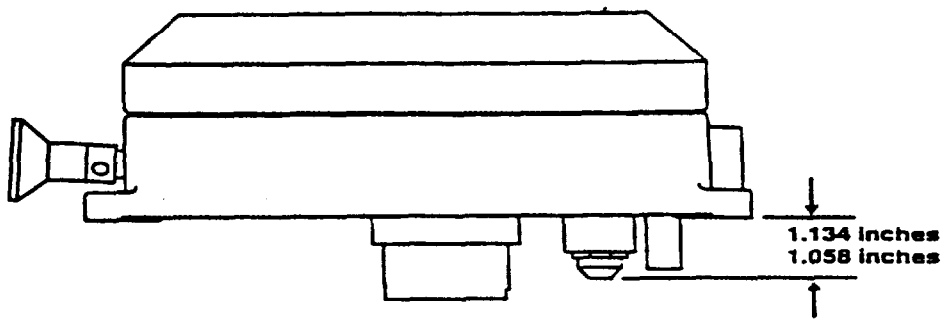


Figure 4. Holdback Pin Plunger Depth Specification

**Final Assembly and Testing of the Launcher Assembly.** Final assembly and testing of the launcher assembly involves performing mechanical adjustments to the launcher assembly. The DMWR requires setscrew and stop block adjustments and holdback pin plunger and umbilical connector distance tests be performed. Those adjustments and tests are performed to ensure operability of the TOW missile launcher.

**Setscrew and Stop Block Adjustments.** A setscrew adjustment gauge, part 12295912-40101-5 (shown in Figure 5), is required to perform the setscrew

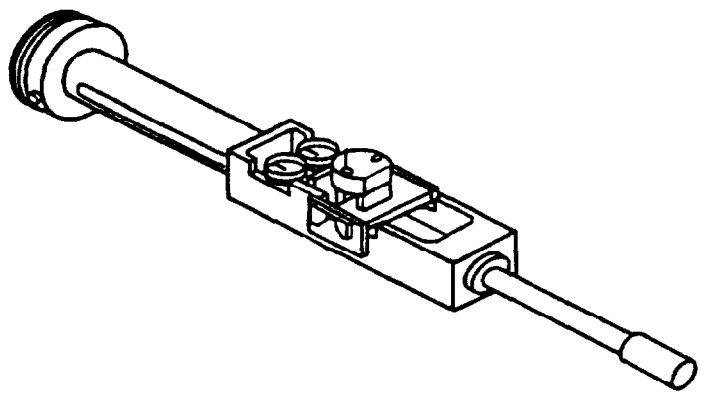

Figure 5. Setscrew Adjustment Gauge

and stop block adjustments to ensure that they meet the design specifications. The setscrew is to be set between -0.0005 inches and 0.0005 inches; and the stop block is to be set between 0.002 inches and 0.001 inches.

**Holdback Pin Plunger and Umbilical Connector Distance Tests.** The distance test is performed to ensure that the holdback pin plunger and umbilical connector travels the minimum required distance. The minimum distance for the holdback pin plunger is 0.350 inches, and for the umbilical connector 0.457 inches. The DMWR requires the use of the boresight alignment fixture (shown in Figure 6), part 12295912-40101-6, to perform this test.

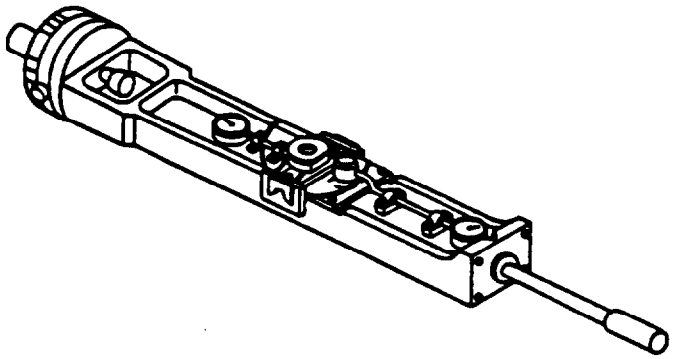

Figure 6. Boresight Alignment Fixture

## Quality Assurance Requirements

The program office did not enforce the quality assurance requirements prescribed by the MWO and DMWR. Specifically, the program office did not enforce the use of required test equipment, required modification and test procedures, and a quality assurance plan.

**Required Test Equipment.** The program office did not enforce the use of special test equipment required by the DMWR to test the modified TOW missile launcher. The DMWR specifically identifies the special tool kits, jigs, test measurement, and diagnostic equipment required to check the operation of the TOW missile launcher. For example, the DMWR specifically requires the use of the switch adjustment gauge set; the setscrew adjustment gauge; and the boresight alignment fixture, as discussed above.

**Use of TOW 2 Subsystem Support Equipment.** Instead of the required test equipment, the field modification teams used the TOW 2 subsystem support equipment supplemented by the Raytheon-manufactured Bradley Fighting Vehicle System turret logic emulator to perform quality assurance testing of the modified TOW missile launcher. The equipment provided off-vehicle direct support level testing of the TOW missile launcher. The capability of the Raytheon Systems Company test equipment was not sufficient to satisfy the quality assurance testing requirements of the DMWR.

**Testing the Adequacy of Off-Vehicle Test Set.** The test equipment used in the field demonstrated that the TOW missile launcher was operational, not that the launcher was operating within required design specifications. The test set was not designed to and cannot perform the test required by the DMWR. To test the adequacy of using the off-vehicle test set, we requested the depot technicians at Letterkenny perform the same test that was used in the field. Using the required special test equipment, Letterkenny technicians aligned the umbilical switches S1 and S3 below and above the limits of the system design specification. The design specifications for those switches are between 0.945 inches and 0.985 inches. First, the S1 and S3 switches were set below the system design specifications of 0.840 inches and 0.860 inches, respectively, and tested. Second, S1 and S3 switches were set above the system design specifications of 0.995 inches and 1.010 inches, respectively, and tested. The DMWR requires verification of those specifications for quality assurance. Despite design specifications not being met, the off-vehicle test set passed the ACU in both cases. Passing this test does not provide confidence that the ACU will function reliably in the future.

**Required Modification and Test Procedures.** The program office did not enforce required modification and test procedures prescribed by the DMWR. The program office did not enforce use of the required test equipment to perform the modification. Without the required test equipment, many of the DMWR procedures, like those described above, could not be implemented. Additionally, the procedures implemented did not provide adequate results.

We requested that Letterkenny technicians conduct a test to determine whether the procedures used in the field yielded results that conformed to the system design specifications. Letterkenny technicians performed ACU final test procedures using equipment required by the DMWR on 15 ACUs, which had been modified without using the required test equipment and procedures. The test involved taking eight separate measurements, specifically, the alignment of the umbilical and motor stop switches (S1 through S6) and the holdback pin plunger depth for both missile launch tubes. Of the 15 ACUs tested, 13 had at least one of the switches misaligned. Overall, 27 of the 120 measurements taken were not within established design specifications. The complete results of our test are detailed in Appendix D.

**Quality Assurance Plan.** The program office did not enforce the requirement for the contractor to establish a quality assurance plan. The DMWR requires that the contractor prepare a quality assurance plan covering the work required and provide the plan to the program office for review and approval before the work is started. Any material or procedural departure from the DMWR requires prior program office approval. The contractor did not prepare a quality assurance plan or request a waiver.

The quality assurance requirements of the DMWR stipulate that quality assurance inspections be performed. The minimum required in-process quality assurance inspections are identified throughout the DMWR. Some of those inspections can be performed only by using special test equipment. As

discussed earlier, the program office did not enforce the requirement to use special test equipment and, therefore, some of the minimum required inspections could not be performed.

**ACU Interchangeability and Reliability.** The interchangeability and reliability of ACUs modified in the field could have been degraded. Specifically, noncompliance with DMWR quality assurance requirements resulted in ACUs that did not meet design specifications. We questioned engineers and managers from both the program office and the contractor regarding the nature and degree of impact resulting from not meeting the design specifications. Although the overall impact was uncertain, the contractor's design engineer stated that not meeting specifications could adversely affect ACU interchangeability. The contractor and the program office agreed that a thorough technical evaluation of the design specifications would have to be performed to determine the impact on interchangeability and reliability of the system.

**Future Field Modifications.** Approximately 1,200 ACUs are scheduled to be modified in the field by September 1999. The program office should ensure that the MWO and DMWR quality assurance requirements are met.

## Conclusion

The program office purchased special test equipment, at a cost of $41,100, and updated modification and test procedures to ensure ACU design specifications would be met and to correct problems experienced in Korea with misaligned switches. However, the program office did not enforce the use of the special equipment and updated procedures during field modifications. As a result, interchangeability and reliability of more than 2,000 ACUs, valued at more than $12 million, could be adversely affected.

## Management Actions

On March 26, 1998, we briefed the finding to the Assistant Deputy Under Secretary of Defense (Maintenance Policy, Programs and Resources) and Army officials in the Office of the Deputy Chief of Staff (Logistics). The finding was well received and management agreed that action was necessary to resolve the problem. Army management requested an additional briefing be provided to representatives of the Army acquisition community responsible for overseeing the ACU modifications. We provided the briefing on April 10, 1998. As a result of our briefings, the Army has aggressively begun collecting data in an effort to develop a plan of action to address the finding.

## Recommendations, Management Comments, and Audit Response

**Revised Recommendation.** As a result of management comments, we revised draft Recommendation 5. to omit the requirement to direct future work load to Letterkenny Army Depot.

**We recommend that the Army Acquisition Executive in coordination with the Army Deputy Chief of Staff (Logistics):**

**1. Initiate a thorough technical evaluation of the design specifications for the armament control unit umbilical and motor stop switches to determine the full effect of not meeting the design specifications.**

**Management Comments.** The Army concurred and stated that the technical evaluation is scheduled for completion June 30, 1998.

**2. Evaluate the adequacy of test equipment and procedures in view of the results of the technical evaluation.**

**Management Comments.** The Army concurred and stated that the issue would be covered under the technical evaluation.

**3. Update the depot maintenance work requirement 9-1440-453-1 procedures, as necessary.**

**Management Comments.** The Army concurred and stated that the Army also intends to update the modification work order 9-1425-453-50 and that the changes to those documents would be completed in the 4th quarter of FY 1998.

**4. Determine the necessity of performing corrective actions to previously modified Tube-Launched, Optically Tracked, Wire-Command missile launchers.**

**Management Comments.** The Army concurred, stating that the technical evaluation will address potential problems. The decision on what corrective actions may be required will be based on the results of testing, scheduled for the 4th quarter of FY 1998. The Army further stated that armament control unit modifications have been halted until the modification work order has been updated and validated.

**5. Direct that all work loads for future field modifications comply with the updated modification work order 9-1425-453-50 and depot maintenance work requirement 9-1440-453-1 quality assurance requirements.**

**Management Comments.** The Army nonconcurred with the draft recommendation, stating that it is Army policy to perform modifications in the private sector using best value as the criteria. As an alternative, the Army intends to award the FY 1999 armament control unit modification program using best value and the updated modification work order to either Raytheon Systems Company or Letterkenny Army Depot. The Army stated that the

updated modification work order will address quality assurance procedures and verification in accordance with Army policy and that adherence to those procedures will be documented on Department of the Army Form 2407.

**Audit Response.** The Army proposed action to perform future modification work loads in accordance with updated MWO and DMWR quality assurance requirements satisfies the intent of the recommendation. We recognize that the quality assurance requirements of the MWO and DMWR may change based on the results of the technical evaluation and agree with the Army intention to award future work loads using a best value approach.

# Part II - Additional Information

# Appendix A. Audit Process

## Scope and Methodology

We reviewed the application of MWO 9-1425-453-50 and DMWR 9-1440-453-1 to the TOW missile launchers at the depot and in the field. We reviewed the MWO, November 1993; depot maintenance work requirement, January 1997; required test equipment; and test equipment actually used in the field to apply the MWO. We interviewed personnel from the TOW missile launcher program office; depot maintenance technicians; and managers, engineers, and field technicians from Raytheon Systems Company. We witnessed modifications performed at Fort Stewart, Georgia, and tests of the modified ACUs using the required test equipment and procedures. We also reviewed maintenance request forms (DA Form 2407), modification schedules, and status reports dated from January through April 1998.

**Use of Computer-Processed Data.** We did not use computer-processed data or statistical sampling to perform this audit.

**Use of Technical Assistance.** An industrial engineer assisted us by interpreting technical drawings and data packages.

**Audit Type, Dates, and Standards.** We performed this program audit from February through March 1998 in accordance with auditing standards that the Comptroller General of the United States issued, as implemented by the Inspector General, DoD.

**Contacts During the Audit.** We visited or contacted individuals or organizations within DoD and the Raytheon Systems Company. Further details are available upon request.

## Management Control Program Review

DoD Directive 5010.38, "Management Control Program," August 26, 1996, requires DoD organizations to implement a comprehensive system of management controls that provides reasonable assurance that programs are operating as intended and to evaluate the adequacy of the controls.

We did not review the management control program for management and execution of modifications to the TOW missile launcher because the General Accounting Office has identified material management control weaknesses with the Army management of the MWO Program. The Army has initiated corrective action. It is revising Army Regulation 750-10, "Maintenance of Supplies and Equipment," August 1, 1984, and approval of a proposal for a new study effort to design and develop an MWO integrated management information system is pending.

# Appendix B. Summary of Prior Coverage

During our review, we identified two related reports.

## General Accounting Office

**General Accounting Office Report No. NSIAD-98-14 (OSD Case No. 1437), "Army Equipment Management of Weapon System and Equipment Modification Program Needs Improvement," October 10, 1997**, states that Army headquarters officials and Army Materiel Command no longer have the information needed to effectively oversee and manage the Army MWO Program. They do not have an adequate overview of the status of the equipment modifications across the force, funding requirements, logistical support requirements, and information needed for deployment decisions. Also, maintenance personnel have not always known which modifications should have been made to equipment or which modifications have actually been made and had difficulty obtaining spare parts to maintain modified equipment. In addition, multiple MWOs for the same piece of equipment were not always coordinated. Maintainers of equipment have not always received adequate notice of pending modifications that adversely affect training schedules and the maintenance of equipment. Further, maintainers did not always receive the technical information they needed in a timely manner to properly maintain modified equipment. Also, equipment did not always work after modifications were made. Supply system personnel have not always followed policies and procedures to ensure that supply system records were updated to show the addition of new spare parts and the deletion of replaced spare parts. The report recommended that the Secretary of the Army direct actions necessary to provide managers at all levels ready access to the information they need to oversee, manage, and implement the MWO Program and to ensure compliance with Army policies and procedures; to clarify regulations to ensure that program sponsors and supply system personnel provide proper logistical support for modified equipment, including ordering appropriate initial spare parts when MWO kits are ordered, updating technical information and providing it to units when MWO kits are installed, and properly phasing out old spare parts and adding new items to its supply system; and to establish an effective mechanism for program sponsors to coordinate and schedule their MWOs among themselves and their customers, to reduce the amount of manpower, and to minimize the reportable mission time required to complete the MWOs. The Army concurred with the findings and recommendations, stating that Army Regulation 750-10 is being revised and approval of a proposal for a new study to design and develop an MWO integrated management information system is pending.

## Army Review

**The ACU Red Team October 1994 Report** states that after modifications were completed to the U.S. Army 2nd Infantry Division, Korea, ACUs, over 50 percent of the Bradley Fighting Vehicle Systems could not fire TOW missiles. The report states that the failures were caused by the misalignment of S1 through S4 switches. The three causes of the misalignment were that the switches were neither level nor secured in place and holdback pin and spring assemblies were not installed in all missile simulators. The report also notes that the S5 and S6 switches were improperly adjusted. The report states that a plan of action was started that included bonding and adjusting switches S1 through S6; installing holdback pins for missile simulators; and proposing an engineering change and a request for deviation or waiver to resolve the items noted.

# Appendix C. Memorandum for Deputy Under Secretary of Defense (Logistics)

INSPECTOR GENERAL
DEPARTMENT OF DEFENSE
400 ARMY NAVY DRIVE
ARLINGTON, VIRGINIA 22202

December 23, 1997

MEMORANDUM FOR DEPUTY UNDER SECRETARY OF DEFENSE (LOGISTICS)

SUBJECT: Audit of the Tactical Missile Consolidation at Letterkenny Army Depot Costs and Benefits (Project No. 7LB-5031.01)

We are conducting the subject audit to evaluate the costs and benefits associated with the tactical missile consolidation at Letterkenny Army Depot. As part of the audit, we reviewed work loads associated with the Tube-Launched, Optically Tracked, Wire-Command (TOW) Missile Launcher for the Bradley Fighting Vehicle System. We are providing this memorandum on the application of modifications prescribed by the Department of the Army Modification Work Order (MWO) 9-1425-453-50, November 15, 1993, for your information and use.

This memorandum is not subject to the provisions of DoD Directive 7650.3, but is intended to provide management an opportunity to evaluate the adequacy of quality assurance testing procedures used during field modifications and to correct any procedural deficiencies that exist prior to executing future field modifications.

**MWO 9-1425-453-50.** The MWO provides instructions for updating the TOW Missile Launcher, National Stock Number 1440-01-167-7514, and the Armament Control Unit (ACU), National Stock Number 1440-01-160-2591, to the latest configuration. The MWO requires the modification be performed by a depot maintenance team and that quality assurance testing be performed as prescribed by the Depot Maintenance Work Requirement (DMWR) 9-1440-453-1, February 1996.

**Testing Requirements.** The DMWR specifically identifies the test equipment and fixtures required to check the operation of the TOW Missile Launcher and the ACU. According to the MWO, the same test equipment and fixtures should be used to satisfy the quality assurance testing requirements after applying the modification. Modification of the ACU includes the setting of four switches, S1, S2, S3, and S4. These switches are for identification and availability of "missile present" and "missile selection" when operating the TOW Missile Launcher. The switches are adjusted to activate when the TOW Missile Launcher is placed in the "ARM" position. Ensuring these switches are set properly requires a special gauge set, the switch adjustment gauge set, Part 1366078. However, personnel from the U.S. Army Aviation and Missile Command and Hughes Aircraft Company applying the field modifications stated they did not use the switch adjustment gauge set to adjust switches S1, S2, S3, and S4. Instead, the field modification teams tested the operation of the modified ACU using the Bradley TOW/TOW2 Sub-System Support Equipment supplemented with a Bradley Fighting Vehicle System Turret Logic Emulator (BTLE) or the Bradley vehicle itself.

This limited test does not verify that the switches are set to the proper specification, only that the ACU is functional. The specification requires the ACU switches be set between .945 and .985 inches and cannot be checked without using the special test equipment.

Although the complete effect of not checking the ACU switch settings to the specification is unknown, the modifications should be applied as prescribed in the MWO and corresponding DMWR. Our immediate concern is that future field modifications be performed using the required test equipment. The modification schedule provided by the U.S. Army Aviation and Missile Command indicates additional modifications are scheduled to begin on January 5, 1998.

We will continue to review this issue during our audit, and determine the effect of not using the proper equipment and fixtures to set the ACU switches to the specification. If you have any questions or comments regarding this memorandum, please contact Mr. John A. Gannon, Audit Program Director, at (703) 604-9176 (DSN 664-9176) or Mr. Stephen T. Hampton, Acting Project Manager, at (703) 604-9194 (DSN 664-9194).

David Steensma

David K. Steensma
Deputy Assistant Inspector General
for Auditing

# Appendix D. Field Modification Test Data

According to the design specifications, umbilical switches S1 through S4 on the TOW missile launchers should be aligned so that they activate when the bottom of the holdback pin plunger is between 0.945 inches and 0.985 inches from the bottom of the ACU housing. The DMWR requires that the distance be measured with a component of the test gauge set, a feeler gauge, part 1365177, using required test procedures. We witnessed a Raytheon Systems Company field service technician modify 15 ACUs at Fort Stewart, Georgia, for the Georgia National Guard. A Letterkenny technician then tested the 15 modified ACUs, using the required test equipment and procedures prescribed by the DMWR, to determine whether the modified ACUs met system design specifications (see Table D-1).

**Table D-1. Switches S1 Through S4 Alignment After Modification**

| | Specification (inches) | | | |
|---|---|---|---|---|
| | S1 | S2 | S3 | S4 |
| Serial Number | .945-.985 | .945-.985 | .945-.985 | .945-.985 |
| MFT-046FS | 0.975 | 0.956 | 0.984 | 0.975 |
| MFT-047FS | 0.965 | 0.956 | **0.940** | **0.936** |
| MFT-048FS | 0.947 | 0.962 | 0.963 | 0.954 |
| 0296 | 0.957 | 0.972 | 0.951 | 0.982 |
| 0455 | 0.956 | 0.974 | 0.961 | 0.966 |
| 0745 | **0.920** | 0.945 | 0.950 | 0.958 |
| 0924 | 0.950 | 0.962 | **0.940** | **0.941** |
| 1788 | **0.941** | **0.934** | 0.968 | 0.971 |
| 4059 | 0.947 | 0.983 | 0.956 | 0.952 |
| 4101 | **0.940** | 0.965 | 0.950 | 0.958 |
| 4128 | 0.975 | **0.986** | 0.976 | 0.957 |
| 4135 | **0.928** | **0.939** | 0.950 | **0.939** |
| 4161 | **0.930** | **0.916** | 0.960 | 0.955 |
| 4233 | **0.942** | 0.968 | 0.982 | 0.978 |
| 4444 | 0.960 | 0.973 | **0.919** | **0.906** |
| Switches Misaligned | 6 | 4 | 3 | 4 |

Note: Bold indicates that the switch is set outside the design specification.

According to the design specifications, alignment of the motor stop switches S5 and S6 must be between .023 and .033 inches, and the holdback pin plunger depth for both inboard and outboard launcher tubes must be between 1.058 and 1.134 inches when extended. The S5 and S6 switches control the extend and retract functions of the ACU motor. We requested that tests of the alignment of the S5 and S6 switches and the holdback pin plunger depth be tested for the 15 ACUs modified at Fort Stewart by a Raytheon Systems Company field service technician. The test was performed by a Letterkenny technician who used the required test equipment and procedures called for in the DMWR to determine whether the modified ACUs met system design specifications (see Table D-2).

**Table D-2. Switches S5 and S6 Alignment After Modification**

| | Specification (inches) | | | |
|---|---|---|---|---|
| Serial Number | S5 .023-.033 | S6 .023-.033 | S5 Inboard 1.058-1.134 | S5 Outboard 1.058-1.134 |
| MFT-046FS | **0.018** | **0.013** | 1.104 | 1.088 |
| MFT-047FS | 0.025 | 0.029 | 1.094 | 1.066 |
| MFT-048FS | 0.029 | 0.029 | 1.092 | 1.097 |
| 0296 | 0.025 | **0.054** | 1.084 | 1.088 |
| 0455 | 0.025 | 0.028 | 1.104 | 1.103 |
| 0745 | 0.029 | 0.033 | 1.076 | 1.094 |
| 0924 | 0.025 | **0.041** | 1.087 | 1.068 |
| 1788 | 0.025 | 0.025 | 1.090 | 1.084 |
| 4059 | 0.028 | **0.046** | 1.089 | 1.088 |
| 4101 | 0.029 | **0.022** | 1.090 | 1.088 |
| 4128 | 0.029 | **0.037** | 1.099 | 1.093 |
| 4135 | 0.025 | 0.029 | 1.094 | 1.099 |
| 4161 | **0.000** | **0.014** | 1.078 | 1.084 |
| 4233 | 0.029 | 0.025 | 1.101 | 1.104 |
| 4444 | **0.000** | 0.024 | 1.086 | 1.072 |
| Switches Misaligned | 3 | 7 | 0 | 0 |

Note: Bold indicates that the switch is set outside the design specification.

# Appendix E. Report Distribution

## Office of the Secretary of Defense

Under Secretary of Defense for Acquisition and Technology
  Deputy Under Secretary of Defense (Logistics)
  Director, Defense Logistics Studies Information Exchange
Under Secretary of Defense (Comptroller)
  Deputy Chief Financial Officer
  Deputy Comptroller (Program/Budget)
Assistant Secretary of Defense (Public Affairs)

## Department of the Army

Auditor General, Department of the Army
Army Acquisition Executive
  Commander, Tactical Missile Program Executive Office
Deputy Chief of Staff for Logistics
Commander, Army Materiel Command
  Commander, Aviation and Missile Command
  Commander, Industrial Operations Command
    Commander, Letterkenny Army Depot

## Department of the Navy

Assistant Secretary of the Navy (Financial Management and Comptroller)
Auditor General, Department of the Navy

## Department of the Air Force

Assistant Secretary of the Air Force (Financial Management and Comptroller)
Auditor General, Department of the Air Force

## Other Defense Organizations

Director, Defense Contract Audit Agency
Director, Defense Logistics Agency
Director, National Security Agency
  Inspector General, National Security Agency
Inspector General, Defense Intelligence Agency

## Non-Defense Federal Organizations and Individuals

Office of Management and Budget
General Accounting Office
National Security and International Affairs Division
Technical Information Center

Chairman and ranking minority member of each of the following committees and subcommittees:

Senate Committee on Appropriations
Senate Subcommittee on Defense, Committee on Appropriations
Senate Committee on Armed Services
Senate Committee on Governmental Affairs
House Committee on Appropriations
House Subcommittee on National Security, Committee on Appropriations
House Committee on Government Reform and Oversight
House Subcommittee on Government Management, Information, and Technology, Committee on Government Reform and Oversight
House Subcommittee on National Security, International Affairs, and Criminal Justice, Committee on Government Reform and Oversight
House Committee on National Security

# Part III - Management Comments

# Department of the Army Comments

DEPARTMENT OF THE ARMY
OFFICE OF THE ASSISTANT SECRETARY
RESEARCH DEVELOPMENT AND ACQUISITION
103 ARMY PENTAGON
WASHI 'TON DC 20310-0103

REPLY TO
ATTENTION OF

SARD-SM 9 June 1998

MEMORANDUM FOR READINESS AND LOGISTICS SUPPORT DIRECTORATE,
OFFICE OF THE ASSISTANT INSPECTOR GENERAL,
DEPARTMENT OF DEFENSE

SUBJECT: Comments on the Recommendations Contained in the Draft DoDIG Audit of the Armament Control Unit (ACU) Modification to the TOW Missile Launcher (TML) for the Bradley Fighting Vehicle

1. Reference. DoDIG Draft Audit Report, Modifications to the Tube-Launched, Optically Tracked, and Wire-Command Missile Launcher for the Bradley Fighting Vehicle System dated 1 May 1998.

2. The Army's comments to the draft DoDIG audit report recommendations are:

   a. **Recommendation 1**: Initiate a thorough technical evaluation of the design specifications for the armament control unit umbilical and motor stop switches to determine the full effect of not meeting the design specifications.
   **Response**: Concur. Draft technical evaluation submitted on 1 June 1998. The final technical evaluation is scheduled for completion on 30 June 1998.

   b. **Recommendation 2**: Evaluate the adequacy of test equipment and procedures in view of the results of the technical evaluation.
   **Response**: Concur. Estimated evaluation completion date: 30 June 1998. Issue covered under technical evaluation.

   c. **Recommendation 3**: Update the depot maintenance work requirement 9-1440-453-1 procedures, as necessary.
   **Response**: Concur, the Army also intends to update the modification Work Order 9-1425-453-50. Changes to these documents will be completed after the technical evaluation is finished. Target date for completion 4th Quarter FY98.

Printed on Recycled Paper

Final Report Reference

d. **Recommendation 4**: Determine the necessity of performing corrective actions to previously modified Tube-Launched, Optically Tracked, Wire-Command missile launchers.
**Response**: Concur. The technical evaluation will address potential problems. A sampling of modified ACU's is scheduled for 4th QTR FY98. Results from this test will provide the basis for a decision on what corrective action may be required. ACU modifications have been halted until the MWO has been updated and validated, and the tests described here have been performed.

e. **Recommendation 5**: Direct that all work loads for future modifications be performed by Letterkenny Army Depot to ensure compliance with the modification work order 9-1425-453-50 and depot maintenance work requirement 9-1440-453-1 quality assurance requirements. Revised
**Response**: Non-concur. It is DOD and Army policy to accomplish modifications and upgrades of weapon systems and equipment in the private sector using best value as the criteria, provided the work is not needed in organic facilities to satisfy core depot maintenance requirements. This MWO is not needed to satisfy core requirements at Letterkenny Army Depot (LEAD). However, LEAD will be considered in determining where the MWO will be accomplished. Using best value and using the updated modification work order (MWO) 9-1425-453-50 the Army intends to award the FY99 ACU modification program to either Raytheon or LEAD. The updated MWO will address quality assurance procedures and verification IAW Army policy. Adherence to these procedures will be documented on DA Form 2407.

3. POC for this action is MAJ William A. Breffeilh, SARD-SM, (703) 604-7210 or MAJ Gary Thie, CCAWS PMO, (256) 842-0846.

for DENNIS L. PATRICK
COL, GS
Director, Missile Systems

# Audit Team Members

This report was prepared by the Readiness and Logistics Support Directorate, Office of the Assistant Inspector General for Auditing, DoD.

Shelton R. Young
Raymond D. Kidd
John A. Gannon
Stephen T. Hampton
LTC Mary L. Franklin, U.S. Army
William H. Zeh
Kevin T. O'Connor
Chandra Shankla